NO.	DATE	NAME	CHANGES
1			
2			
3			

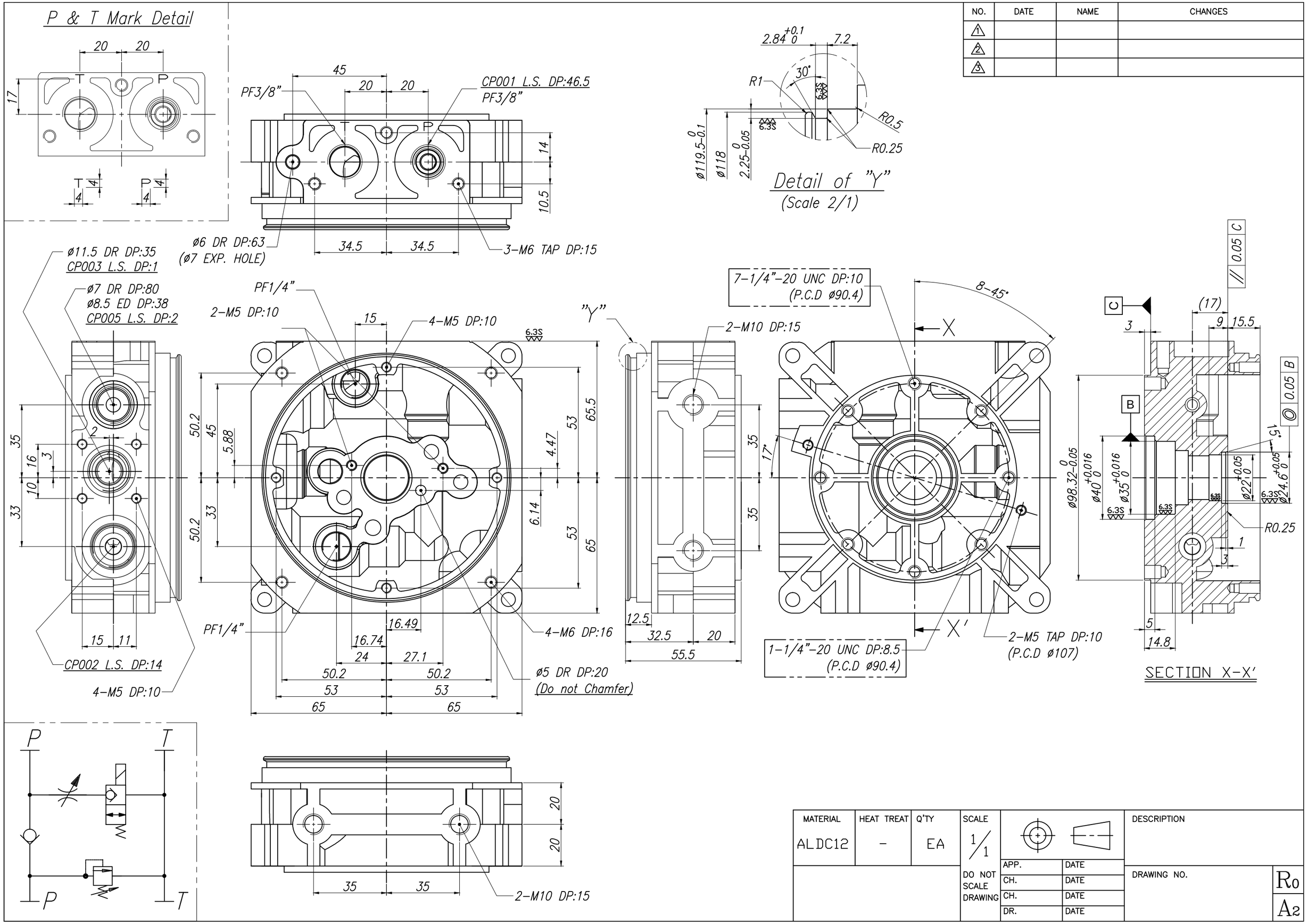

MATERIAL	HEAT TREAT	Q'TY	SCALE			DESCRIPTION
ALDC12	-	EA	1/1	APP.	DATE	
			DO NOT SCALE DRAWING	CH.	DATE	DRAWING NO.
				CH.	DATE	R0
				DR.	DATE	A2